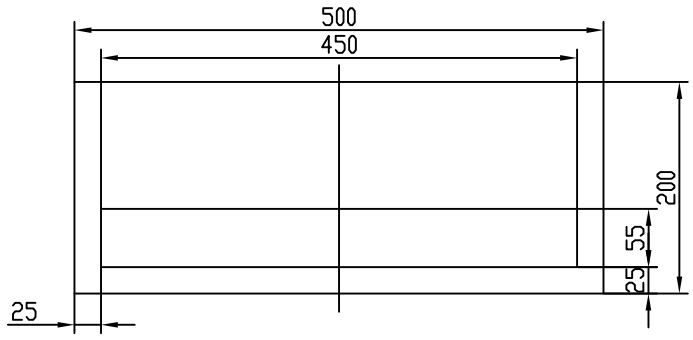
500
450
200
55
25
25

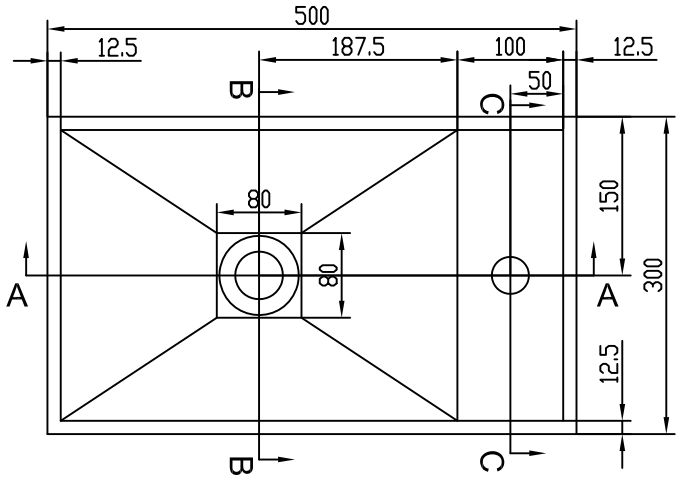
500
12.5
187.5
100
12.5
50
B
C
80
80
150
300
12.5
A
A
B
C

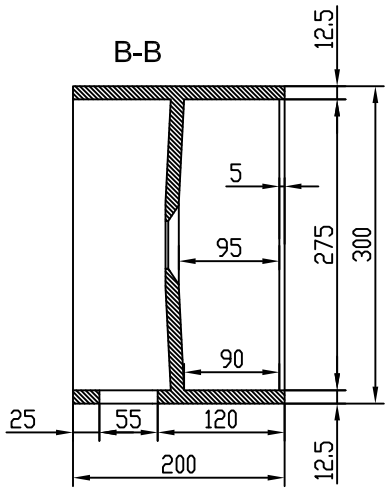
B-B
12.5
5
95
275
300
90
25
55
120
200
12.5

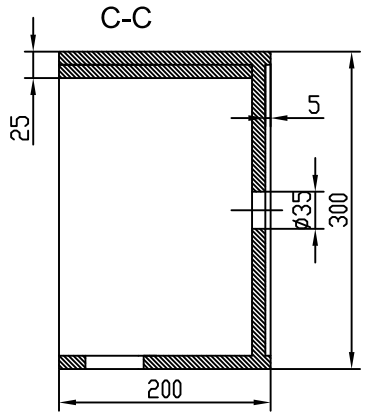
C-C
25
5
ø35
300
200

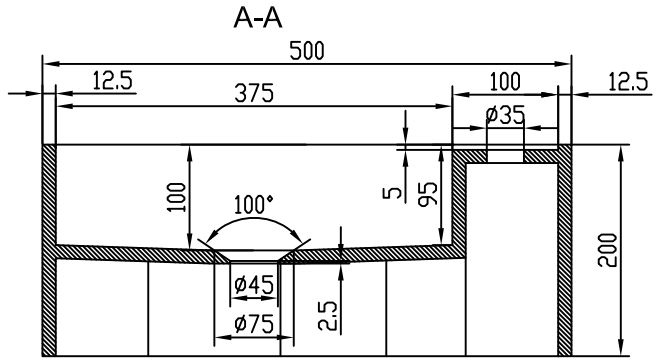
A-A
500
12.5
375
100
12.5
ø35
100
100°
5
95
200
ø45
ø75
2.5

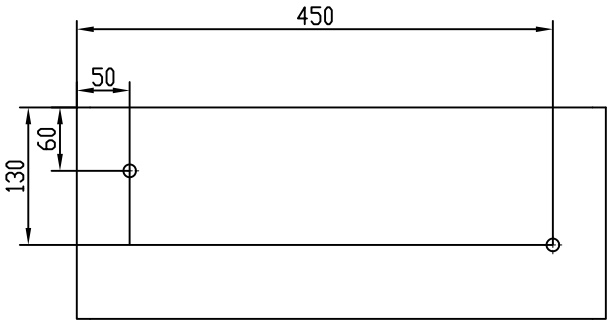
450
50
60
130