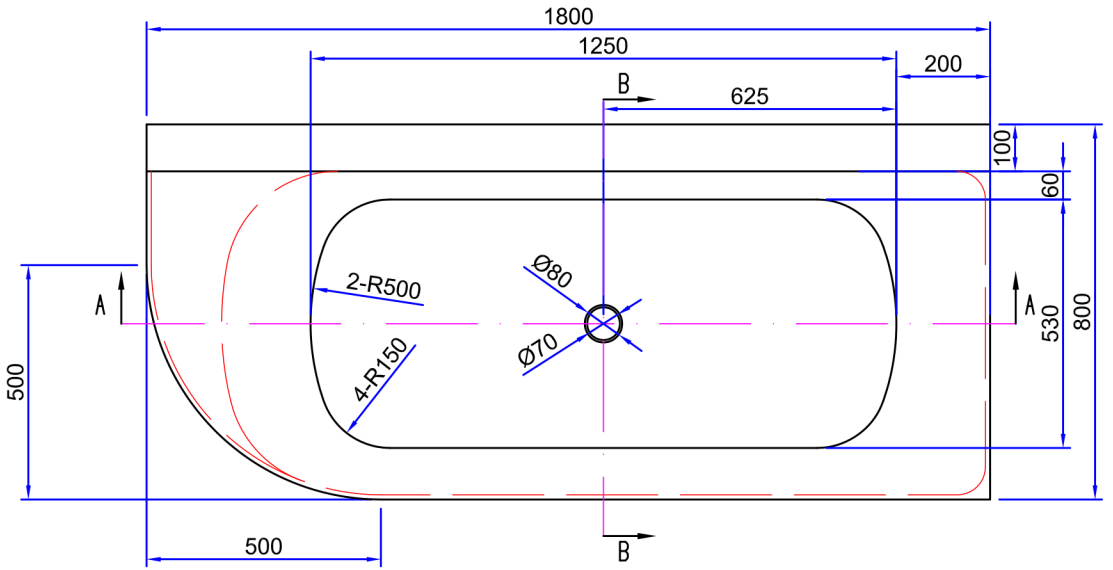
1800
1250
200
B
625
100
60
530
800
A
A
2-R500
Ø80
Ø70
4-R150
500
500
B

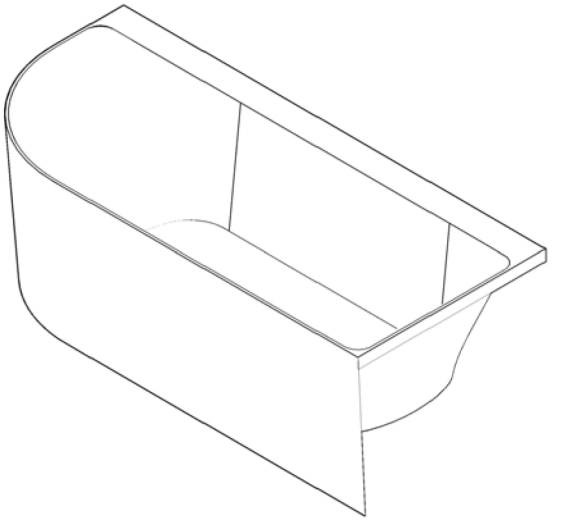

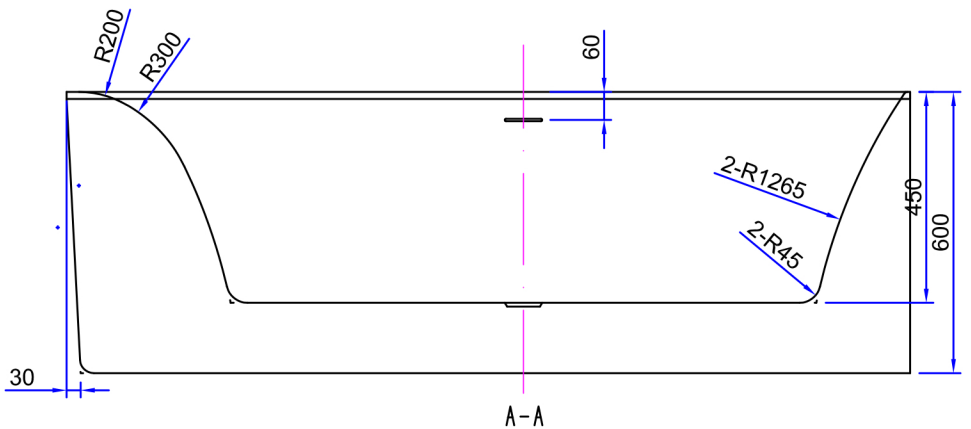
R200
R300
60
2-R1265
2-R45
450
600
30
A-A

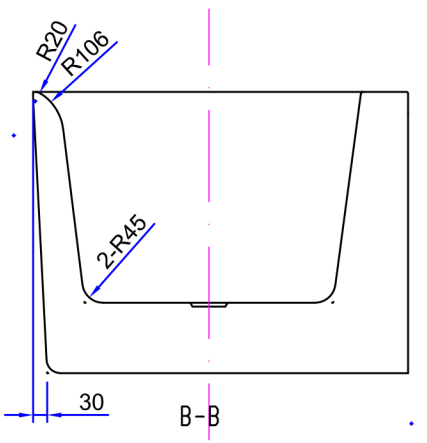
R20
R106
2-R45
30
B-B